www.elsewedyelectric.com

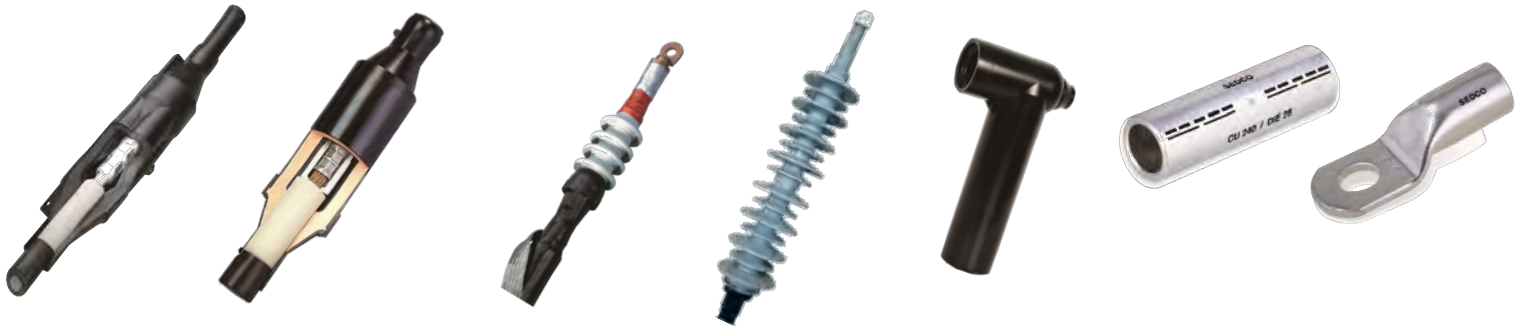

Cables Accessories

ELSEWEDY ELECTRIC | Integrated Energy Solutions

www.elsewedyelectric.com

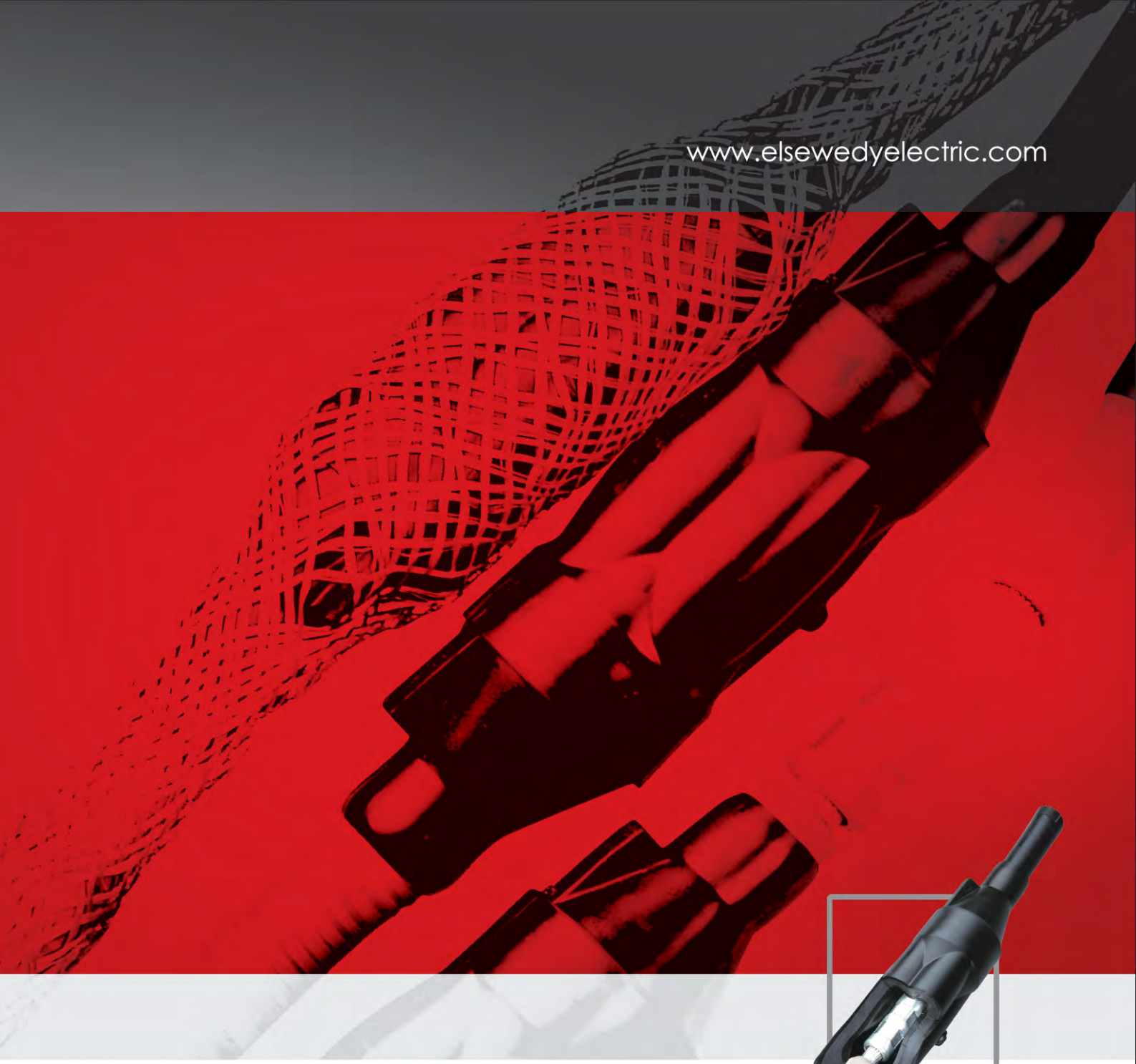

POWER CABLE JOINTS

Up to 36 kV

Integrated Energy Solutions

ELSEWEDY ELECTRIC

POWER CABLE JOINTS

Up to 36 kV

Molded Shield
3.2mm thick conductive EPDM shield continues the cable nonmetallic insulation shield

Heat Transfer
Cloverleaf shaped design provides positive contact to the compression connector

Excellent Stress management
Unique conductive insert design provides optimum electrical stress relief

Interference Fit
Assures watertight seal and complete dielectric integrity

Grounding Eye
For convenient attachment of ground wire

Reduced Assembly Forces
- Cloverleaf design permits controlled deflection to minimize assembly force
- Lower viscosity grease supplied
- Cloverleaf design provides positive hand grip

Contact Installed with Standard Tooling
- Aluminium contact on aluminium conductor
- Copper contact on copper conductor

Cable Insulation
Diameter range 16.26 - 53.85 mm is covered by each individual joint housing size

No Assembly Tools Required

Assembly Tolerance
- Extreme precision not required
- Minimal cable preparation

Compatible with all Polymeric Insulation

Rated to Cable Ampacity

IEC Standard 60502-4
IEEE Standard 404
CENELEC HD 629.1

1) Joint Stored on One Side of The Cable Core.
2) Joint In Its Final Position.
3) Restoration.

The Power Cable Joints are highly reliable, factory-molded and tested cable joints for 15kV, 25kV and 35(36)kV class distribution systems. When assembled, they provide permanent, fully shielded, fully submersible cable joints for direct burial or vault applications of solid dielectric single-core and three-core cables.

The Power Cable Joints are designed to meet or exceed the IEC 60502-4 standard as well as the rigid IEEE 404 standard. The Power cable joints offer the benefits of an optimum design for electrical stress control, they are factory molded for consistent high quality and are factory tested before field installation to insure maximum reliability. They are easy to install without special tools and they are easy to specify for various cable types.

POWER CABLE JOINTS

Up to 36 kV

The molded stress control configuration offers excellent stress management through computer-aided definition of shape transitions and state-of-the-art materials science.

1 Heat transfer from the cable contact is enhanced by maintaining a positive interference fit with the conductive insert, and shaping of the electrical insulation to provide minimal thermal resistance to ambient and an increased external surface area (relative to a cylindrical design of equal insulation thickness).

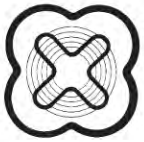

2 The cloverleaf design reduces assembly forces by allowing the housing wall section to flex rather than stretch during assembly (A basic cylindrical design would require the circumference to expand).

3 The cloverleaf design, with benefits of positive heat transfer interface, and reduced assembly force is made possible by exact proportioning of the changing cross section. The resulting equipotential lines have a smooth transition without areas of stress concentration.

Optimum Design

A critical part of a cable joint is the electrical stress relief configuration. The proportions of the Power Cable Joint are predetermined to be the optimum configuration. Every cable joint in the field will have the optimum design and performance characteristics. Unlike field fabrication technologies, the shape and quality of this critical aspect will not be varied by the inconsistent assembly techniques of different crews.

In addition to the computer-aided design for optimum stress management, the Power Cable Joints feature a unique cloverleaf-shaped cross section. This feature reduces assembly force requirements by allowing the housing to flex. This makes assembly easier without special tools.Heat transfer from the cable contact is enhanced by maintaining a positive interference fit with the conductive insert.

Easy to Specify

The Power Cable Joints are easy to specify for three-core as well as single-core cables. The cable joint specifications are derived from the cable specifications.

Factory Molded

Factory molded means process consistence. The performance capabilities projected by the qualified design are maintained throughout production by ensuring that the manufacturing process is consistent. Each cable joint housing is molded on a microprocessor-controlled, screw injection pressure, cycle time and cure rate. The critical bonding of the insulation and conductive rubber is ensured in the controlled factory environment.

Factory Tested

All Power Cable Joint housings are electrically tested in the factory before shipping. In contrast, electrical pretesting of heat shrink or tape joints is just not possible prior to the final assembly in the field. A comprehensive quality assurance program has been designed to include every aspect of manufacturing the Power Cable Joint. 100% electrical testing ensures product reliability. Additionally a unique identification for each tested article provides strong traceability system, at which we can trace the production date, Batch no., Operator, production & testing records to ensure superior quality however this is not possible for heat shrink or tape joints.

Easy to Install

The Power Cable Joints install faster than either a complete heat shrink or tape joint. In practice, installations of most manufacturers' products are divided into three stages:
1) Cable Preparation.
2) Jointing.
3) Restoration.

Cable preparation and restoration essentially require the same degree of time and workmanship to complete regardless of the manufacturer. The jointing of cables in any high voltage installation is the most critical stage and it can be very time consuming. Because the Power Cable Joint is fabricated in the factory, the jointing stage is made very easy. Connect the conductors, slide the Power Cable Joint into position and the jointing is finished.
Now that the jointing is complete you know the installation is a good one because every Power Cable Joint is 100% electrically tested in the factory prior to shipment.

Ordering Formula

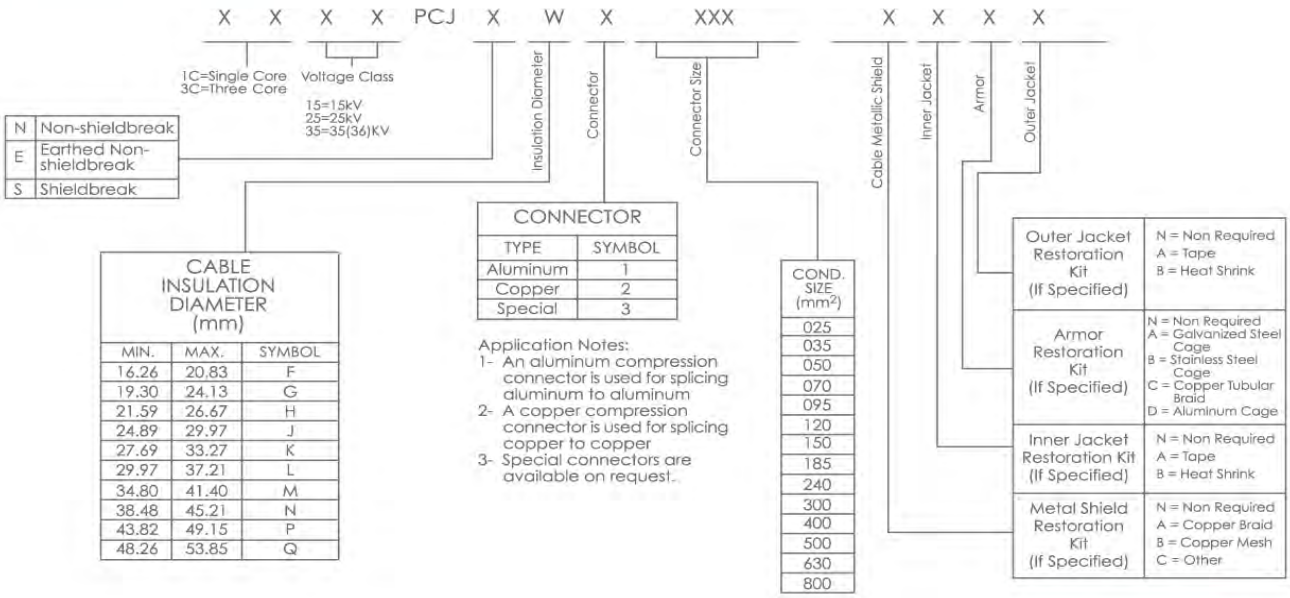

Manufacturing Stages, Testing & Packing

Manufacturing Stages

Manufacturing Stages

Testing

Packing

SYSTEM CERTIFICATION ISO 9001:2008 SGS

Cert. No. EG10/2471

KEMA

Due to continuous product improvements, some specifications could be changed without notice.

ELASTIMOLD EGYPT
EL SEWEDY - ELASTIMOLD

ELSEWEDY SEDCO
ITALSMEA - ELSEWEDY

Office:
Plot 27, 1st District, 5th Settlement,
P.O. Box 311, New Cairo, 11835, Egypt
Tel. : (+202) 27 599 750 - 751
Fax: (+202) 27 599 752

Factory:
PC.#36A South (A'1), Industrial Region, 10th of Ramadan City
Tel. : +2 015 411141
Fax : +2 015 411142
E-mail : elastimold@elsewedy.com
: sedco@elsewedy.com

www.elsewedyelectric.com

36J/R2-0111

www.elsewedyelectric.com

MODULAR TERMINATORS

Up to 36 kV

Integrated Energy Solutions

ELSEWEDY ELECTRIC

MODULAR TERMINATORS

Up to 36 kV

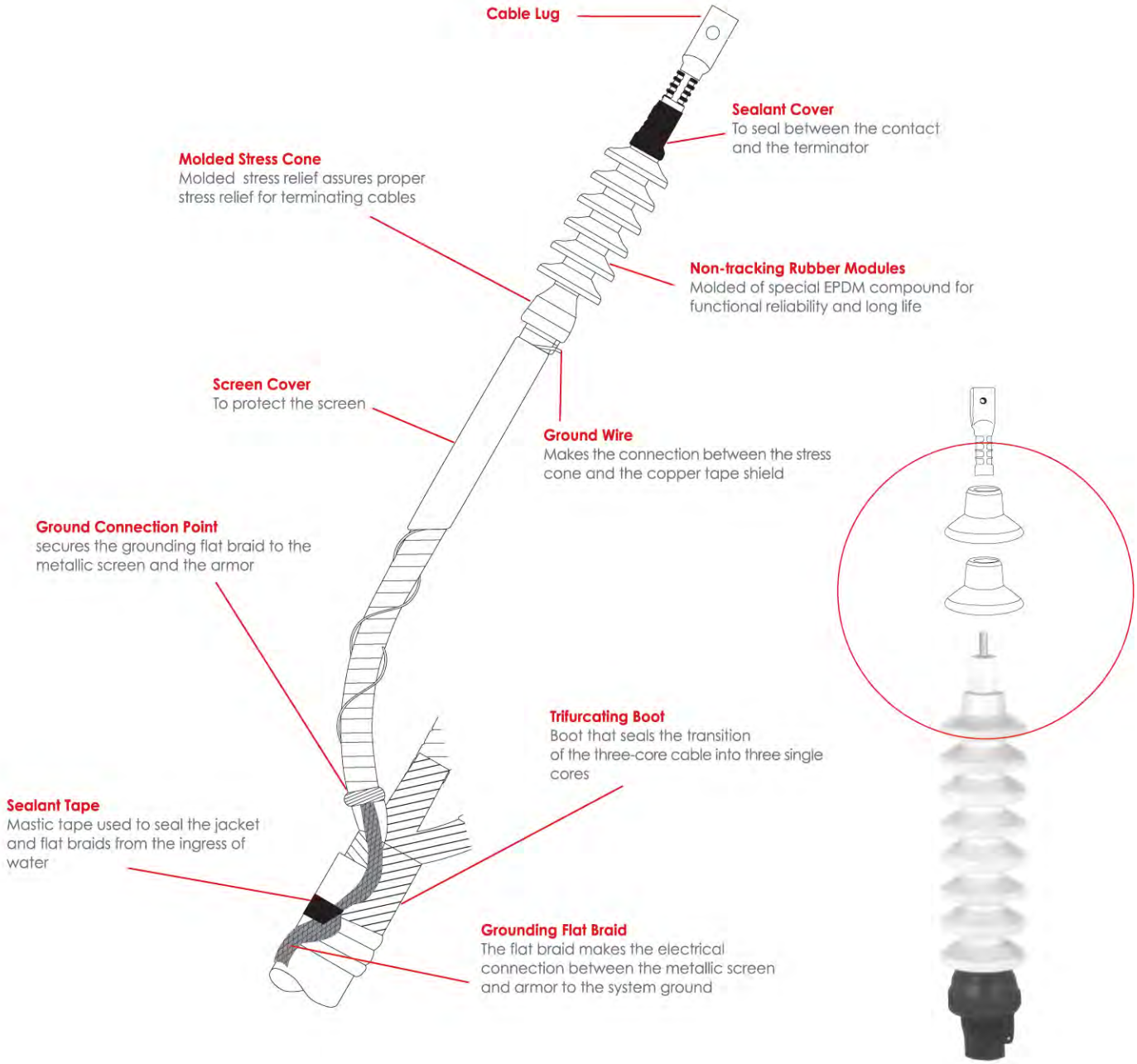

Compatible with all Polymeric Insulation Cable

Rated to Cable Ampacity

IEC Standard 60502-4
IEEE Standard 48
CENELEC HD 629.1

MODULAR TERMINATORS

Up to 36 kV

Premolded Cable Termination for XLPE, EPR and any Polymeric Insulation Cable up to 36 kV Indoor – Outdoor

• Maximum Reliability	:	Computer designed and manufactured for superior temperature and stress management. Maximum reliability with control of known factors.
• Superior Stress Management and Temperature profile	:	Computer designed and manufactured using a microprocessor - controlled screw injection press to ensure a constant stress control configuration. Operates cooler than the cable conductor.
• Tests	:	Meets the requirements of international standards, IEEE 48, IEC 60502-4 and CENELEC HD 629.1.
• Factory Molded	:	For constant stress control configuration.
• Factory Pretested	:	Assuring field installations meet design standards, Stress cone undergoes partial Discharge Tests.
• Fast Fitting	:	Stress Cone fits directly over semiconductor of cables. Earthing provision available for stress cone.
• Faster installation	:	Lower installation cost, requiring no special skills.
• Extra Creepage Distance	:	This is achieved by adding extra modular skirts.
• Ambient Temperature	:	-30°C upto +60°C.
• Reduced Training Requirements	:	Easily learned installation procedure,Human error totally eliminated.

Modular Terminators Application

The Modular Terminators series are suitable for use with indoor and outdoor terminations on single-core and three-core solid dielectric cables conforming to the requirements of IEEE Standard 48, IEC 60502-4 and CENELEC HD 629.1. Typical uses for the Modular Terminators would be on riser poles either at the substation or on the distribution lines. The Modular Terminators can also be used on the switchgear and transformers. The Modular Terminators series are designed for use on extruded dielectric cables, and can be applied directly on cables with extruded semi-conductive shield. The Modular Terminators series are designed for aluminum or copper conductors with a diameter range over the insulation of 12.6 mm(0.495") to 50.2mm(1.975"). The Modular Terminators kit comes complete with the appropriate components to connect, ground and seal the termination.

Installation

The comprehensive installation instructions will be supplied with each kit describing the correct cable preparation. The termination is a slip-on product which requires less time and labour skill to install if compared to other types of terminations.

MODULAR TERMINATORS

Up to 36 kV

Electrical Ratings

Voltage (Phase to Phase)	15 kV	25 kV	36 kV
Impulse 1.2x50 Wave	110 kV	150 kV	200 kV

Current Rating is equal to the cable's rating.
Ratings based on IEEE Standard 48, IEC 60502-4, CENELEC HD 629.1 and do not reflect maximum withstand levels, for levels that exceed the above, contact your dealer representative.

Number of Modules VS. Creepage Distance (mm)

NO. of MOD.		1	2	3	4	5	6	7	8	9	10
CREEPAGE DISTANCE	A	145	210	275	340	405	470	535	600	665	730
	B	200	282	364	446	528	610	692	774	856	938

A. Cable diameter over insulation: 12.6 mm through 39.2mm(0.495"-1.540") EB – JB
B. Cable diameter over insulation: 37.7mm through 50.2mm(1.485"-1.975") KA- PB
Creepage distance depending on the voltage class, pollution level and the type of termination

Stress Control Configuration

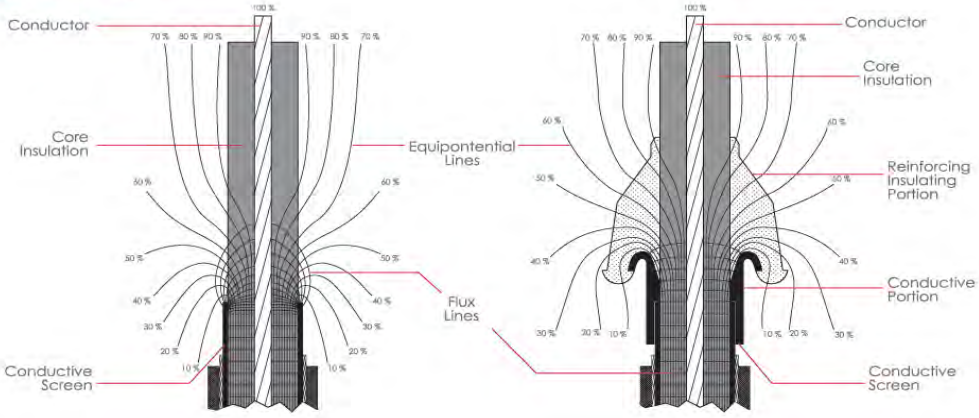

Ordering Formula

X X MTG X WWW XXX NN X

- 1C= Single Core, 3C= Three Core
- O = Outdoor, I = Indoor
- WWW: Insulation Diameter
- XXX: Conductor Size (mm²)
- NN: Number of Modules: Depending on the Voltage Class, the type of the termination & the required creepage distance.
- X: LUG

CABLE INSULATION DIAMETER (mm)			
	Symbol	Min.	Max.
A	EB	12.60	14.90
	EF	13.30	16.10
	FA	14.60	17.40
	FAB	15.90	18.70
	FB	17.20	19.90
	FG	18.40	21.20
	GA	19.70	25.00
	GAB	21.00	27.20
	GB	22.20	27.40
	GH	23.60	28.50
	HA	24.90	29.80
	HAB	26.40	31.60
	HB	27.80	32.40
	HJ	29.50	34.20
	JA	31.00	34.90
	JAB	32.60	37.30
	JB	34.40	39.20
B	KA	37.70	41.00
	KAB	38.90	42.60
	KB	40.00	43.30
	PA	42.30	47.80
	PB	44.60	50.20

LUG	
TYPE	SYMBOL
Aluminum	1
Copper	2
Special	3

Application Notes:

1- An Aluminum compression lug is used for Aluminum conductor.

2- A Copper compression lug is used for Copper conductor.

3- Special lugs are available on request.

Manufacturing Stages, Testing & Packing

Manufacturing Stages

Manufacturing Stages

Testing

Packing

SYSTEM CERTIFICATION ISO 9001:2008 SGS

Cert. No. EG10/2471

KEMA

Due to continuous product improvements, some specifications could be changed without notice.

ELASTIMOLD EGYPT
EL SEWEDY - ELASTIMOLD

ELSEWEDY SEDCO
ITALSMEA - ELSEWEDY

Office:
Plot 27, 1st District, 5th Settlement,
P.O. Box 311, New Cairo, 11835, Egypt
Tel. : (+202) 27 599 750 - 751
Fax: (+202) 27 599 752

Factory:
PC.#36A South (A'1), Industrial Region, 10th of Ramadan City
Tel. : +2 015 411141
Fax : +2 015 411142
E-mail : elastimold@elsewedy.com
: sedco@elsewedy.com

www.elsewedyelectric.com

36MT/R2-0111

www.elsewedyelectric.com

TRANSMISSION CABLE JOINTS

Up to (72.5) kV

Integrated Energy Solutions

ELSEWEDY ELECTRIC

TRANSMISSION CABLE JOINTS

Up to (72.5) kV

Grounding Eye
For convenient attachment of ground wire

Heatsink
(if applicable).

Excellent Stress management
Unique conductive insert design provides optimum electrical stress relief

Molded Shield
Conductive EPDM shield continues the cable nonmetallic insulation shield

Interference Fit
Assures watertight seal and complete dielectric integrity

Contact Installed with Standard Tooling

Joint Body insulation

Insulating/Conductive band

Cable Outer Semi conductor

Cable Insulation
Diameter range (45 - 77) mm is covered by each individual joint housing size

Optional shieldbreak
Integral factory molded shieldbreak is available for reliable cross bonding

Compatible with all Polymeric Insulation

Rated to Cable Ampacity

IEC Standard 60840
IEEE Standard 404

TRANSMISSION CABLE JOINTS

Up to (72.5) kV

All Transmission Cable Joints are factory molded and factory tested, providing maximum reliability. Factory molding ensures a level of insulation and shielding system integrity not achievable with field –fabricated insulation systems. The Transmission Cable Joints can be utilized in combination with various options for conductor connectors shielding and environmental sealing depending on the characteristics of the cable and the installations.

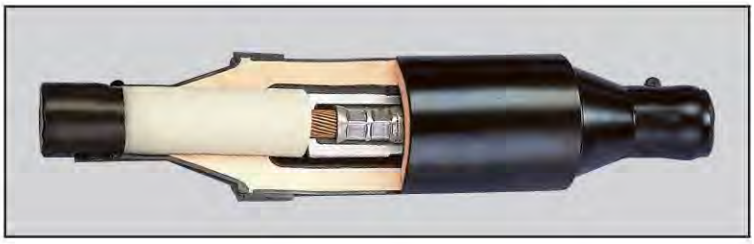

The Transmission Cable Joints are designed for use on solid dielectric cables with insulation diameters from 45 mm to 77 mm. When assembled, They provide permanent, fully-shielded, fully–submersible cable joints for direct burial or vault applications.

Installation procedures are easily learned and the installation does not require labor intensive field molds or tape-wrapping machinery. Field assembly is greatly simplified because all electrical stress – management elements have been provided during the factory molding process rather than being fabricated in the field.

A Transmission Cable joint is available for any application, with ambient temperature - 40 °C up to 65° C.

All Transmission Cable Joints are designed with optimized stress control and heat transfer capabilities. You do not have to rely on the expertise of a field installer to fabricate a reliable joint.

Premolded housing void - free joint housing consists of cured EPDM insulation bonded under pressure to cured molded semiconductive elements.

Maximum Reliability & lowest Installed Cost

- **Faster Installation.**
  The molding is done in the factory, reducing on-site time. No penciling of cable insulation required.
- **Reduced Training Requirements.**
  Easily –learned installation procedure.
- **No Costly Installation Machinery Required**
  Field molds or wrapping machines are not required. A low-cost assembly tool is available.
- **No Special Environmental Equipment Requirements**
- **Unlimited Shelf Life**
  Allows for instant availability
- **Factory-Molded Quality**
  You can be sure each cable joint in the field is produced exactly per design. Each unit is molded a micro- processor controlled screw injection press to produce a level of quality not possible with field molding equipment or tape.
- **Factory- 100% factory Tested**
  Each unit is electrically tested in the factory to insure consistent quality.

* All shield connections techniques are available, please indicate with order

TRANSMISSION CABLE JOINTS
Up to (72.5) kV

Technical Data

RATINGS	
Nominal system voltage UL (kV)	69
Maximum system voltage: Um (kV)	72.5
Max. Continuous conductor temp.	90°C
Splice compression connectors per ANSI C119.4	Class A/Class2
Type tests-per IEC 60840	
Partial discharge test (Corona test)	
- Voltage rise and hold for 10 sec up to (kV)	67
- Partial discharge level determined at (kV)	57
- Max. allowable PD level (PC)	5
- Conductor temperature	Ambient
Heating cycle voltage test	
- Test voltage (kV)	76
- Conductor temperature	(95 °C)
- Followed by partial discharge test	
Impulse voltage test (10 Pos., 10 Neg., 50 HZ)	
- Impulse voltage test (kV)	325
- Conductor temperature	(95 °C)
AC voltage test (after completion impulse test)	
- Test voltage (kV) for 15 min	95
- Conductor temperature	Ambient
Production test (each unit)	
Corona extinction voltage (kV) (<5PC sensitivity)	57
AC withstand: 15 min. (kV)	95

Cable Data Required

Table to be filled with order:

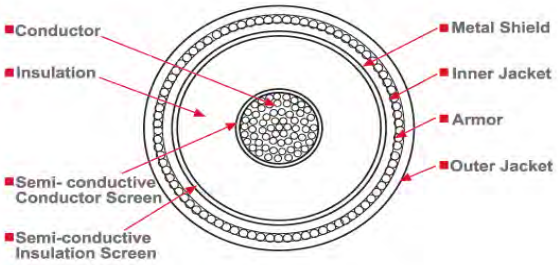

	Material	Size mm²	Outside diameter mm
Conductor			
Metal shield			

	Material	Nominal thickness mm	Nominal Outside diameter mm
Insulation			
Inner jacket			
Armor			
Outer jacket			

Ordering Formula

X TCJ X 1 X X XXX X X X

- Voltage Class (kV): 69 = 69 (72.5) kV
- Housing Type: (N) Non-Shieldbreak; (E) Earthed Non-Shieldbreak; (S) Shieldbreak
- Housing Style
- Housing Size
- Connector Type: (1) Aluminum; (2) Copper; (3) Special
- Connector Size
- Cable Metallic Shield
- Armor
- Outer Jacket

Size	Insulation Range mm
P	44.47-51-90
Q	49.66-58.42
R	55.88-65.53
S	65.37-76.89

Outer Jacket Restoration Kit (If Specified)	N = Not Required A = Tape B = Heat Shrink C = Coffin box
Armor Restoration Kit (If Specified)	N = Not Required R = Required
Metal Shield Restoration Kit (If Specified)	N = Not Required L = Lead cover C = Copper Tube A = Aluminium O = Other

Manufacturing Stages, Testing & Packing

Manufacturing Stages

Manufacturing Stages

Testing

Packing

SYSTEM CERTIFICATION ISO 9001:2008 SGS

Cert. No. EG10/2471

KEMA

Due to continuous product improvements, some specifications could be changed without notice.

ELASTIMOLD EGYPT
EL SEWEDY - ELASTIMOLD

ELSEWEDY SEDCO
ITALSMEA - ELSEWEDY

Office:
Plot 27, 1st District, 5th Settlement,
P.O. Box 311, New Cairo, 11835, Egypt
Tel. : (+202) 27 599 750 - 751
Fax: (+202) 27 599 752

Factory:
PC.#36A South (A'1), Industrial Region, 10th of Ramadan City
Tel. : +2 015 411141
Fax : +2 015 411142
E-mail : elastimold@elsewedy.com
: sedco@elsewedy.com

www.elsewedyelectric.com

69J/R2-0111

www.elsewedyelectric.com

TRANSMISSION CABLE TERMINATIONS

Up to 69 kV

Integrated Energy Solutions

ELSEWEDY ELECTRIC

69 TCT Terminator

Termination for cable systems

Rated up to 69 KV.

The 69 TCT Terminator provides a termination for cable systems rated up to 69 KV class. It conforms to IEC 60840. This terminator is designed for solid dielectric cables with insulation diameters from 36.8mm to 62.2 mm.

Various lugs are available for the conductor connection.

The durable elastomer construction eliminates glaze damage failures associated with porcelain. A state-of-the- art shed design ensures a non- continuous drip path and the non-tracking polymer requires no surface oil or grease.

Installation

The 69 TCT Terminator is lightweight and easy to handle. It can be assembled horizontally on the ground and then raised to the installation position without a crane. Installation can be accomplished without special training using a normal assembly / tension device. The 69 TCT can utilize standard cable support systems.

Features	Benefits/Descriptions
Molded EPDM Elastomer Housing	Durable under server environmental conditions and does not require a surface Oil/grease to maintain non-tracking properties.
State-of-the-Art shed Design	Employs unequal diameters to interrupt the drip path from shed to shed
Housing Slides over Cable Insulation	Provides required creep path and waterseal
Computer –Designed Molded Stress Relief	Ensures proper stress relief for the terminated cable

Electrical Data for 69TCT Transmission Cable Termination

According to IEC 60840:

Nominal Voltage	69 kV
maximum working Voltage	72.5 kV
Partial Discharge	<5 pC @ 54 kV
BIL (@ 1.2 x 50 microsecond wave) 10 positive, 10 negative	325 kV
AC withstand 50Hz 1 Minute Dry	90 kV

TRANSMISSION CABLE TERMINATIONS

Up to 69 kV

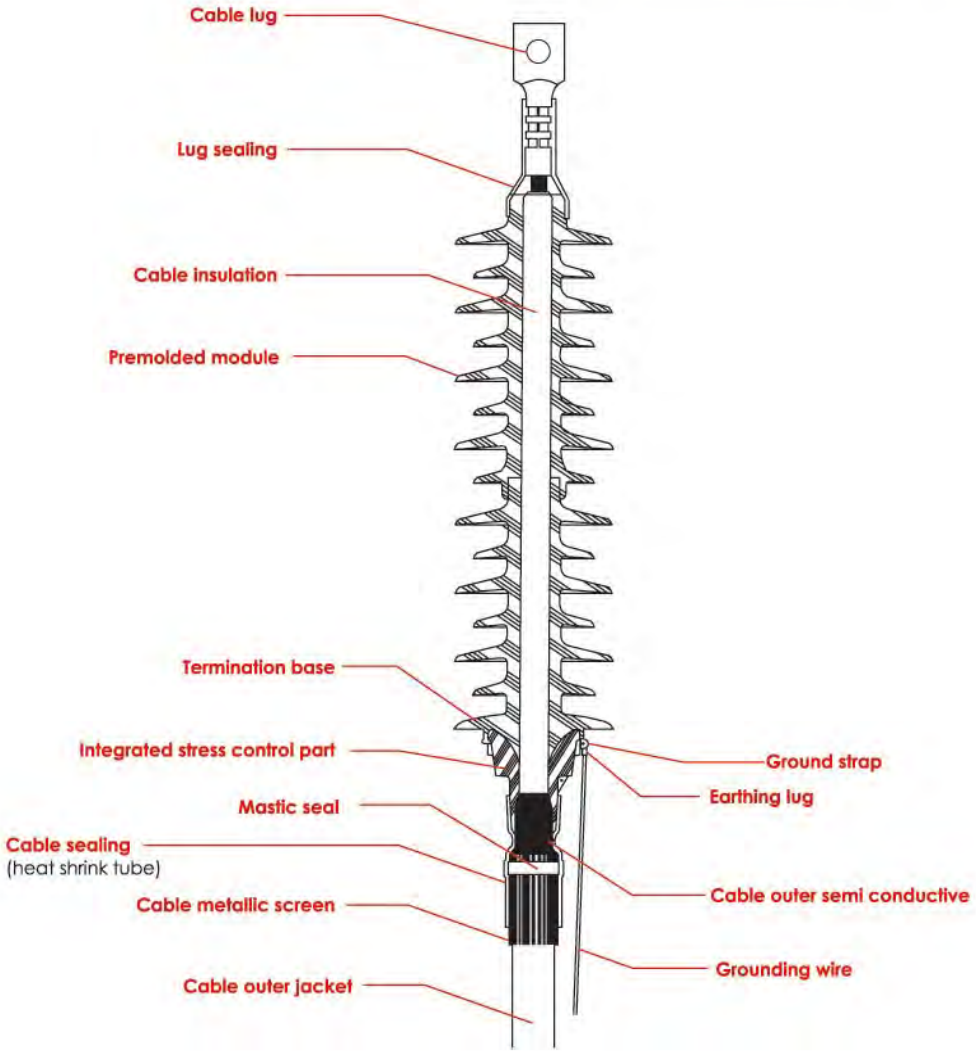

Ordering Formula

69 TCT X X X XXXX X

Size

Size	Finished over insulation diameter	
	Min.	Max.
0	36.8	43.2
1	41.9	48.3
2	47.0	54.6
3	53.3	62.2

Cable C.S.A

Metallic Screen

1	Not required
2	Copper tape
3	Copper wires
4	Lead
5	Aluminum correguated

Number of molded parts

Number & type of parts		Creepage Distance
1	Base only	1139.7 mm
2	Base and top module	2343.1 mm
3	Base and 2 top module	3546.5 mm

* Extra creepage distances can be achieved by excess modules.

Connector Type

1	Aluminum
2	Copper
3	Special

ELASTIMOLD EGYPT
EL SEWEDY - ELASTIMOLD

ELSEWEDY SEDCO
ITALSMEA - ELSEWEDY

Office:
Plot 27, 1st District, 5th Settlement,
P.O. Box 311, New Cairo, 11835, Egypt
Tel. : (+202) 27 599 750 - 751
Fax: (+202) 27 599 752

Factory:
PC.#36A South (A'1), Industrial Region, 10th of Ramadan City
Tel. : +2 015 411141
Fax : +2 015 411142
E-mail : elastimold@elsewedy.com
: sedco@elsewedy.com

www.elsewedyelectric.com

SYSTEM CERTIFICATION ISO 9001:2008 SGS
Cert. No. EG10/2471

KEMA

Due to continuous product improvements, some specifications could be changed without notice.

www.elsewedyelectric.com

DEAD BREAK SEPARABLE CONNECTORS

Integrated Energy Solutions

ELSEWEDY ELECTRIC

15/25kV 250A Deadbreak Elbow
156 LR-WXX

IEC Standard 60502-4, IEEE Standard 386, CENELEC HD 629.1

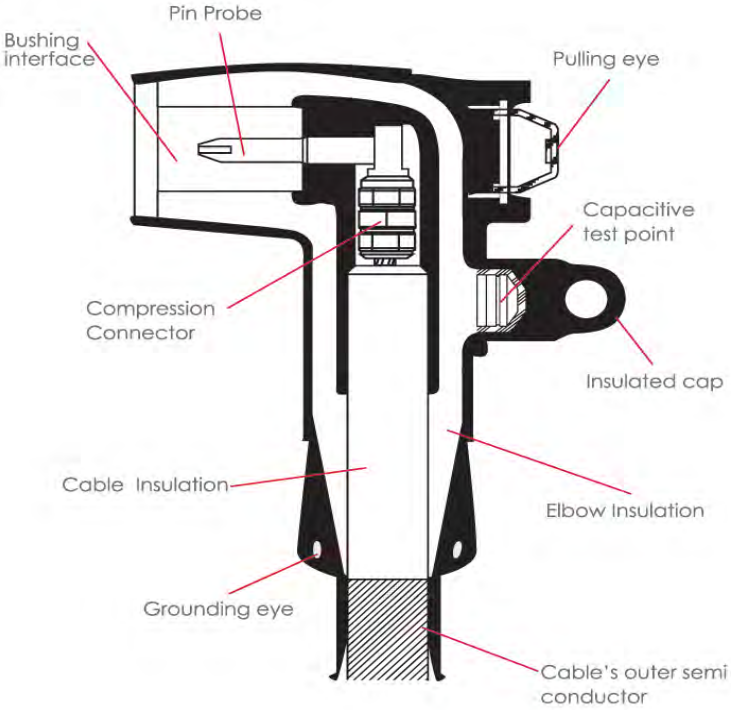

Application

156LR Elbow Connector is a fully-rated 15/25kV, 250Amp Class deadbreak connector. Units include provisions for de-energized operation using standard hot stick tools. It has a standard interface for connecting to 15/25kV, 250 Amp deadbreak bushing inserts, junctions and other accessories. The 156LR is equipped with an integral voltage test point.
Mates with bushing interface conforms to CENELEC EN 50181 interface (A).

Features

- 15/25kV, 250 Amp Deadbreak plug in Elbow.
- Fully shielded, fully submersible molded rubber housing.
- 100% peroxide-cured construction includes insulation and conductive EPDM materials.
- Optionally, Non-corrosive, capacitively coupled voltage test point with removable protective cap.
- Provision for hot stick operation.
- Provision for ground wire connection.
- Wide cable range with minimum number of sizes.
- No special tool,heating,taping or potting are required.

Ordering Instructions

Determine the insulation diameter of the cable. Select the corresponding elbow size that straddles the insulation diameter.

15/25kV 250A Deadbreak Elbow
156 LR-WXX

IEC Standard 60502-4, IEEE Standard 386, CENELEC HD 629.1

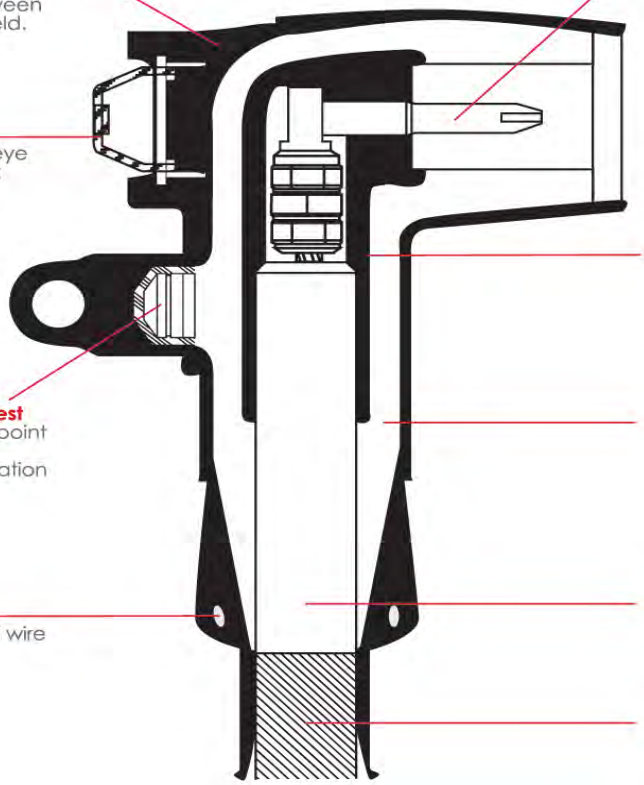

156LR - W - X - XXX

Cable Insulation Dia. Range	Elbow Size	Conductor metal		COND. SIZE (mm^2)
mm			Symbol	
16.3 - 20.8	F	Aluminum	1	025
19.3 - 24.1	G	Copper	2	035
21.6 - 26.7	H			050
24.9 - 30.0	J			070
27.7 - 33.3	K			095
				120

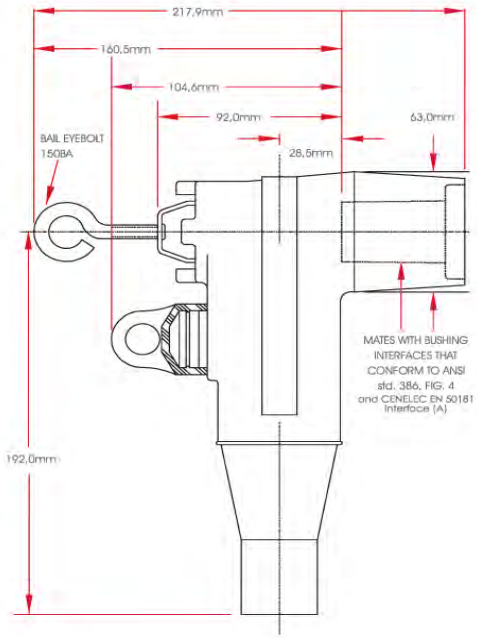

15/25kV 630A Deadbreak Elbow
K400LB-WXX

IEC Standard 60502-4, IEEE Standard 386, CENELEC HD 629.1

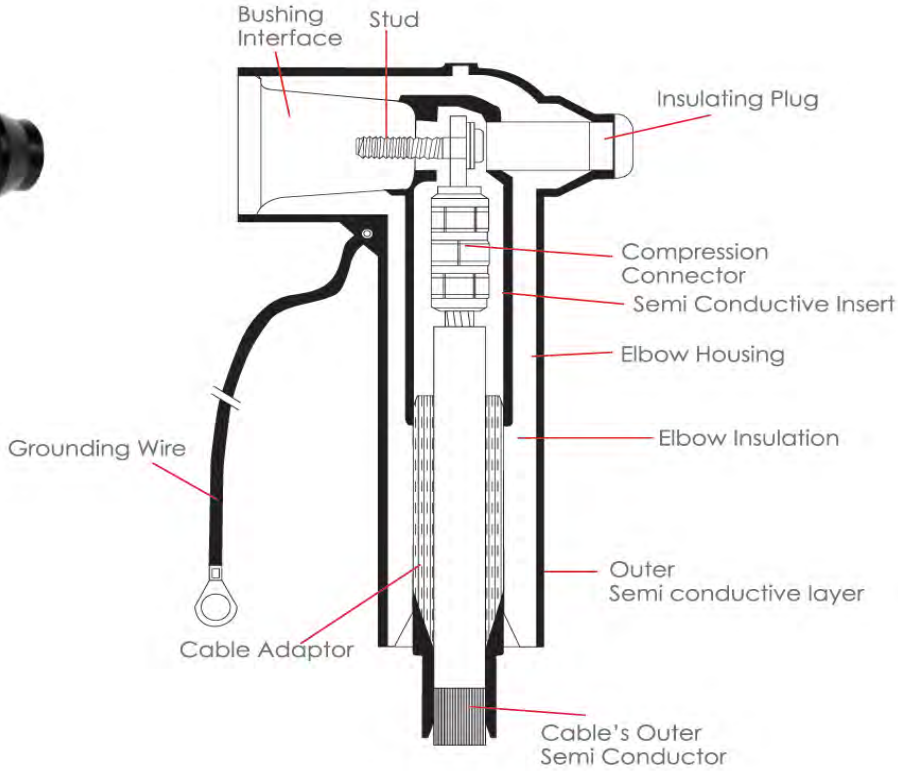

Application

The K400LB is designed to provide fully-shielded, dead-front submersible cable connections to high-voltage apparatus. The K400LB can be used up to 25 kV for aluminum and copper conductors.

Features

The bushing interface conforms to CENELEC EN 50181 for using with standard 400/630A European switchgear C interface. A ground wire is attached for easy shield grounding after installation.

The product for using with standard 400 A European switchgear B interface is available upon request.

Ordering Instructions

Determine the insulation diameter of the cable. Select the corresponding adaptor size that straddles the insulation diameter .

15/25kV 630A Deadbreak Elbow
K400LB-WXX

IEC Standard 60502-4, IEEE Standard 386, CENELEC HD 629.1

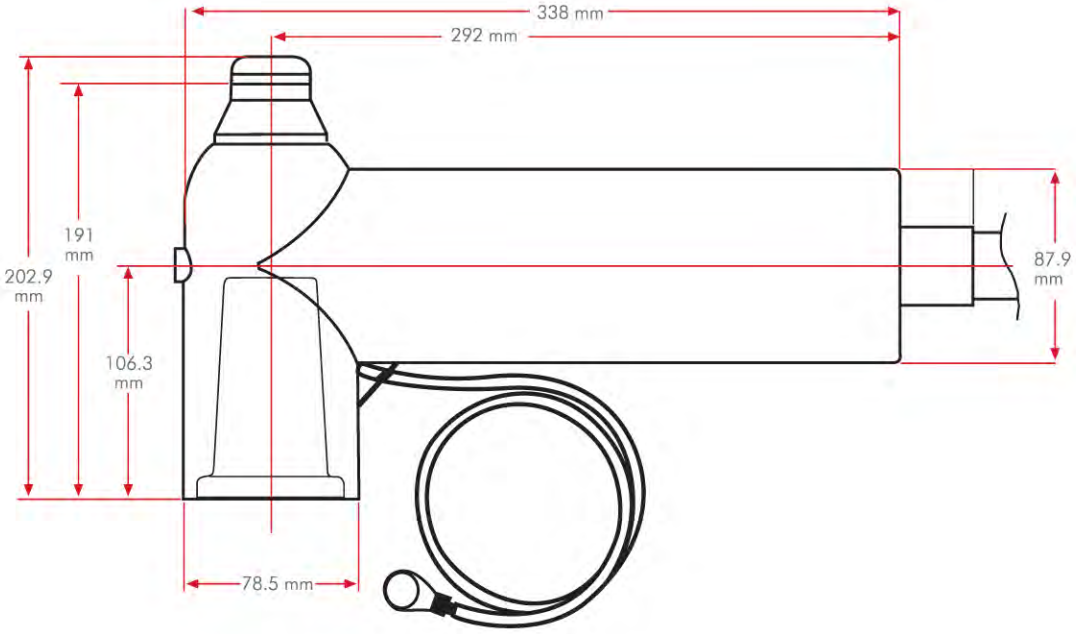

K400LB - W - X - XXX

Cable Insulation Dia. Range	Adaptor Size	Conductor metal		COND. SIZE (mm^2)
mm			Symbol	
16.3 - 20.8	F	Aluminum	1	025
19.3 - 24.1	G	Copper	2	035
21.6 - 26.7	H			050
24.9 - 30.0	J			070
27.7 - 33.3	K			095
30.0 - 37.2	L			120
34.8 - 41.4	M			150
38.5 - 45.2	N			185
43.8 - 49.1	P			240
				300
				400
				500
				630

- Tinned Al lug is supplied for both Cu & Al conductor as a default.
  For other options please specify.

15/25/36kV 630A Deadbreak Elbow
T Shape

IEC Standard 60502-4, IEEE Standard 386, CENELEC HD 629.1

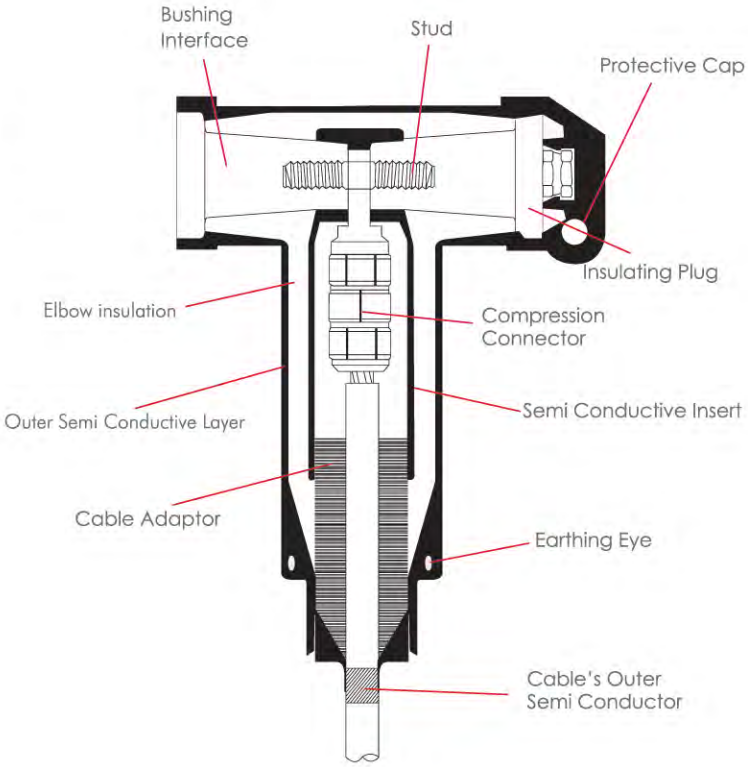

Application

The T - body is designed to provide fully-shielded, dead-front submersible cable connections to high-voltage apparatus. It can be used through 36 kV with conductor range up to 630 mm^2 for aluminum and copper conductors.

Features

The product mates with bushing interface conform to CENELEC EN 50181. B, C & D interface customized from both side as per client requests.

Ordering Instructions:

- Specify interface symbol according to your switch gear interface.
- Determine the insulation diameter of the cable. Select the corresponding adaptor size that straddles the insulation diameter.

15/25/36kV 630A Deadbreak Elbow
T Shape

IEC Standard 60502-4, IEEE Standard 386, CENELEC HD 629.1

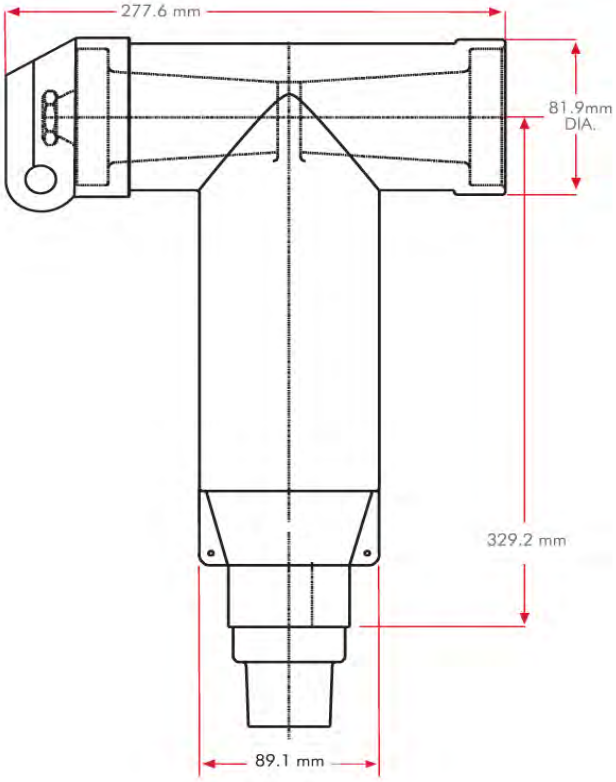

X X - W - X - XXX

Voltage Class		Type of Interface	Symbol	Cable Insulation Dia. Range	Adaptor Size	Conductor metal		COND. SIZE (mm^2)
KV	Symbol			mm			Symbol	
15kV	-	C/D	465	16.3 - 20.8	F	Aluminum	1	025
25kV	K	D/D	655	19.3 - 24.1	G	Copper	2	035
36kV	M	C/C	455	21.6 - 26.7	H			050
		B/D	466	24.9 - 30.0	J			070
				27.7 - 33.3	K			095
				30.0 - 37.2	L			120
				34.8 - 41.4	M			150
				38.5 - 45.2	N			185
				43.8 - 49.1	P			240
								300
								400
								500
								630

Example:
For 25KV ,185mm^2 stranded AL Cable with a dia. Over insulation of 28.5mm and the required ELBOW interfaces are C and D.Order K465J1185

- Tinned Al lug is supplied for both Cu&Al conductor as a default. For other options, please specify.

ELASTIMOLD EGYPT
EL SEWEDY - ELASTIMOLD

ELSEWEDY SEDCO
ITALSMEA - ELSEWEDY

SYSTEM CERTIFICATION
ISO 9001:2008 SGS
Cert. No. EG10/2471

KEMA

Due to continuous product improvements, some specifications could be changed without notice.

Office:
Plot 27, 1st District, 5th Settlement,
P.O. Box 311, New Cairo, 11835, Egypt
Tel. : (+202) 27 599 750 - 751
Fax: (+202) 27 599 752

Factory:
PC.#36A South (A'1), Industrial Region, 10th of Ramadan City
Tel. : +2 015 411141
Fax : +2 015 411142
E-mail : elastimold@elsewedy.com
: sedco@elsewedy.com

www.elsewedyelectric.com

ELBO/R2-0111

ELSEWEDY SEDCO

Subsidiary of ELSEWEDY ELECTRIC

Tubular Copper Lugs

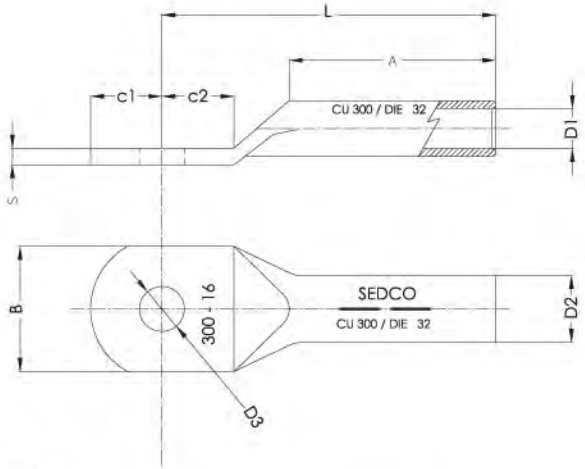

Tube	: Seamless, one piece tube
Material	: Electrolytic tough pitch copper
Conductivity	: High conductive 99.9% E.T.P
Finish	: Tin plated to assure maximum conductivity.
Identification	: Conductor size ,stud size and connector die size are marked on every piece
Manufacturing standard	: DIN 46235
Tube manufacturing	: In compliance with DIN EN 13600.

Code	Conductor Size mm²	Stud Size	Conn. Die D(*)	A	B	C1	C2	D1	D2	D3	E	L	S
STCL 6/6	6	M 6	5	10	8.5	7.5	8	3.8	5.5	6.4	0.6	24	1.5
STCL 10/6	10	M 6	6	10	9	7.5	8.5	4.5	6	6.4	0.6	27	1.5
STCL 16/8	16	M 8	8	20	13	10	10	5.5	8.5	8.4	1	36	2.5
STCL 25/8	25	M 8	10	20	16	10	10	7	10	8.4	1	38	3
STCL 35/10	35	M 10	12	20	19	12	12	8.2	12.5	10.5	1	42	2.5
STCL 50/10	50	M 10	14	28	22	12	12	10	14.5	10.5	1	52	4
STCL 70/12	70	M 12	16	28	24	13	13	11.5	16.5	13	2	55	5
STCL 95/12	95	M 12	18	35	28	13	13	13.5	19	13	2	65	5
STCL 120/12	120	M 12	20	35	32	16	17	15.5	21	13	2	70	5.5
STCL 150/12	150	M 12	22	35	34	16	17	17	23.5	13	2	78	6
STCL 185/16	185	M 16	25	40	37	19	20	19	25.5	17	2	82	6
STCL 240/16	240	M 16	28	40	42	19	20	21.5	29	17	2	92	6.5
STCL 300/16	300	M 16	32	50	48	19	22	24.5	32	17	2	100	7
STCL 400/20	400	M 20	38	70	55	25	25	27.5	38.5	21	3	115	10
STCL 500/20	500	M 20	42	70	60	25	25	31	42	21	3	125	10
STCL 630/20	630	M 20	44	80	60	25	25	34.5	44	21	3	135	10
STCL 800/20	800	M 20	52	100	75	25	25	40	52	21	4	165	12

(*) D= Recommended die size for hexagonal crimping ⬡

- All dimensions in mm.
- Other dimensions, shapes or sizes are available upon request.
- Due to continuous product improvement, some specifications could be changed without notice.

STCL/R2-0911

ELSEWEDY SEDCO
ITALSMEA - ELSEWEDY

Office: Plot 27, 1st District, 5th Settlement, P.O. Box 311, New Cairo, 11835, Egypt
Tel.: (+202) 27 599 750 - 751 Fax: (+202) 27 599 752

Factory: PC.#36A South (A'1), Industrial Region, 10th of Ramadan City
Tel.: +2 015 411141 - Fax: +2 015 411142
E-mail: elastimold@elsewedy.com
: sedco@elsewedy.com

ELSEWEDY SEDCO

Subsidiary of ELSEWEDY ELECTRIC

Tubular Aluminum Lugs

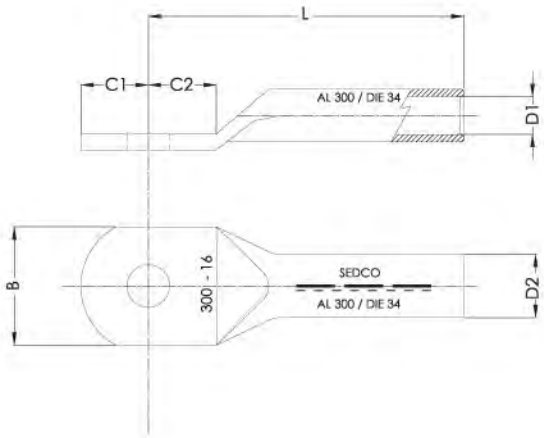

Tube : Seamless, one piece tube
Material : Pure Aluminum
Conductivity : high conductive 99.5%
Finish : Chemically treatment
Identification : Conductor size, stud size and connector die size are marked on every piece
Tube manufacturing :according to DIN EN 755-7

Code	Conductor Size mm²	Stud Size	Conn. Die D(*)	B	C1	C2	D1	D2	L
STAL 25/8	25	M 8	12	18	9.5	12.0	6.8	12	60
STAL 35/10	35	M 10	14	21	11.2	14.5	8.0	14	67
STAL 50/10	50	M 10	16	25	14.0	14.5	10.0	16	72
STAL 70/12	70	M 12	18	28	15.0	17.5	11.2	18	86
STAL 95/12	95	M 12	22	32	15.5	18.0	13.2	22	90
STAL 120/12	120	M 12	22	32	16.0	17.0	14.7	22	91
STAL 150/12	150	M 12	25	35	17.5	21.5	16.3	25	103
STAL 185/16	185	M 16	28	40	21.5	25.0	18.5	28	106
STAL 240/16	240	M 16	32	45	23.5	26.0	21.0	32	116
STAL 300/16	300	M 16	34	49	24.0	25.0	23.3	34	124
STAL 400/20	400	M 20	38	58	30.5	32.0	26.0	38	165
STAL 500/20	500	M 20	44	60	30.0	31.5	29.0	44	185

(*) D= recommended die size for hexagonal crimping ⬡
- All dimensions in mm.
- Other dimensions, shapes or sizes are available upon request.
- Due to continuous product improvement, some specifications could be changed without notice.

STAL/R2-0911

www.elsewedyelectric.com

ELSEWEDY SEDCO
ITALSMEA - ELSEWEDY

Office: Plot 27, 1st District, 5th Settlement, P.O. Box 311, New Cairo, 11835, Egypt
Tel.: (+202) 27 599 750 - 751 Fax: (+202) 27 599 752

Factory: PC.#36A South (A'1), Industrial Region, 10th of Ramadan City
Tel.: +2 015 411141 - Fax: +2 015 411142
E-mail: elastimold@elsewedy.com
: sedco@elsewedy.com

ELSEWEDY SEDCO

Subsidiary of ELSEWEDY ELECTRIC

Standard Copper Lugs

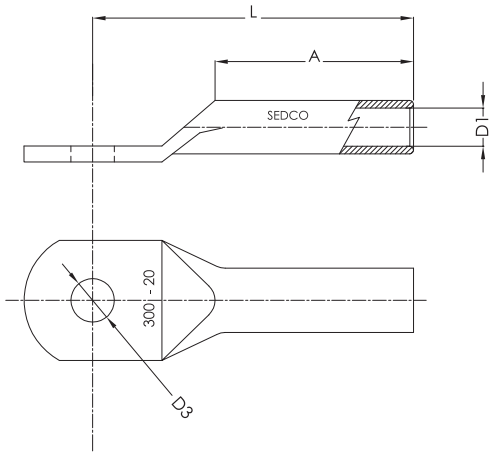

Tube : Seamless, one piece tube
Material : Electrolytic tough pitch copper
Conductivity : High conductive 99.9% E.T.P
Finish : Tin plated to assure maximum conductivity
Identification : Conductor size and stud size are marked on every piece.
Tube Manufacturing : In compliance with DIN EN 13600.

Code	Conductor Size mm^2	Stud Size	A	D1	D3	L
SSCL 6/6	6	M 6	10	3.8	6.5	31.5
SSCL 10/6	10	M 6	10	4.5	6.5	34.5
SSCL 16/8	16	M 8	11	5.5	8.5	35
SSCL 25/8	25	M 8	12	6.8	8.5	38
SSCL 35/8	35	M 8	15	8.2	8.5	45
SSCL 50/10	50	M 10	18	9.5	10.5	50
SSCL 70/10	70	M 10	20	11.2	10.5	53
SSCL 95/12	95	M 12	22	13.4	13.0	60
SSCL 120/12	120	M 12	26	15.0	13.0	65
SSCL 150/12	150	M 12	30	16.5	13.0	72
SSCL 185/16	185	M 16	30	19.0	17.0	83
SSCL 240/16	240	M 16	35	21.0	17.0	94
SSCL 300/20	300	M 20	44	23.5	21.0	111
SSCL 400/20	400	M 20	44	27.0	21.0	114
SSCL 500/20	500	M 20	68	31.0	21.0	144
SSCL 630/20	630	M 20	68	34.0	21.0	144

- All dimensions in mm.
- Other dimensions, shapes or sizes are available upon request.
- Due to continuous product improvement, some specifications could be changed without notice.

SSCL/R2-0911

www.elsewedyelectric.com

ELSEWEDY SEDCO
ITALSMEA - ELSEWEDY

Office: Plot 27, 1st District, 5th Settlement, P.O. Box 311, New Cairo, 11835, Egypt
Tel.: (+202) 27 599 750 - 751 Fax: (+202) 27 599 752

Factory: PC.#36A South (A'1), Industrial Region, 10th of Ramadan City
Tel.: +2 015 411141 - Fax: +2 015 411142
E-mail: elastimold@elsewedy.com
: sedco@elsewedy.com

ELSEWEDY SEDCO

Subsidiary of ELSEWEDY ELECTRIC

Bi-Metallic Insert Lugs

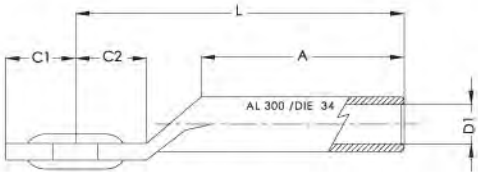

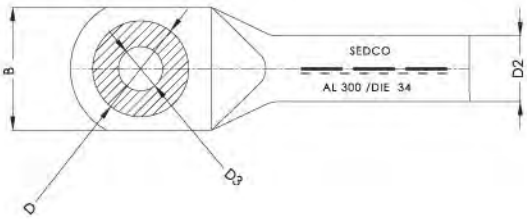

Tube : Seamless, one piece tube
Material : Pure Aluminum 99.5%
Finish : Chemically treatment
Ring Material : High conductive 99.9% E.T.P copper
Ring Finish : Plain copper
Identification : Conductor size, stud size and connector die size are marked on every piece
Tube Manufacturing : According to DIN EN 755-7.
Manufacturing : Copper ring is inserted in the Al palm and excellent connection is assured .

Bi-metallic insert (ring) lugs assure a maximum reliability connection of aluminum cables to copper busbars,copper bushings,..etc.

Code	Conductor Size mm²	Stud Size	Conn. Die D(*)	A	B	C1	C2	D1	D2	D3	D	L
SBIL 70/12	70	M 12	18	51.5	32	16.5	18	11.2	18	13	28	86
SBIL 95/12	95	M 12	22	51.5	35	17	18	13.2	22	13	28	90
SBIL 120/12	120	M 12	22	51.5	35	17	19	14.7	22	13	28	92
SBIL 150/12	150	M 12	25	59	35	18.5	21.5	16.3	25	13	28	103
SBIL 185/12	185	M 12	28	59	40	22.5	24	18.5	28	13	28	106
SBIL 240/16	240	M 16	32	67	45	25.5	26	21	32	17	33	116
SBIL 300/16	300	M 16	34	76.5	50	25	25	23.3	34	17	33	125
SBIL 400/16	400	M 16	38	99	58	30.5	32	26	38	17	35	165
SBIL 500/16	500	M 16	44	110	62	30.0	37	29	44	17	35	185

(*) D= recommended die size for hexagonal crimping ⬡

- All dimensions in mm.
- Other dimensions, shapes or sizes are available upon request.
- Due to continuous product improvement, some specifications could be changed without notice.

SBIL/R2-0911

ELSEWEDY SEDCO
ITALSMEA - ELSEWEDY

Office: Plot 27, 1st District, 5th Settlement, P.O. Box 311, New Cairo, 11835, Egypt
Tel.: (+202) 27 599 750 - 751 Fax: (+202) 27 599 752

Factory: PC.#36A South (A'1), Industrial Region, 10th of Ramadan City
Tel.: +2 015 411141 - Fax: +2 015 411142
E-mail: elastimold@elsewedy.com
: sedco@elsewedy.com

ELSEWEDY SEDCO

Subsidiary of ELSEWEDY ELECTRIC

Bi-Metallic Friction Lugs

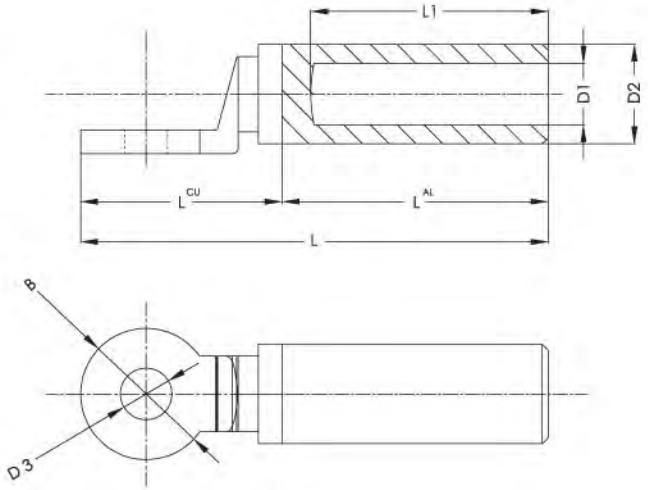

Palm Material : Pure electrolytic copper
Palm Finish : Plain copper
Barrel Material : Pure aluminum
Barrel Finish : Chemically treatment
Manufacturing : Copper palm is welded to Al barrel by cutting edge friction welding technology.
Bi-metallic friction lugs assure a maximum reliability connection of aluminum cables to copper busbars,copper bushings,..etc

Code	Conductor Size mm²	Stud Size	D2	D3	D1	B	L1	L	LCU	LAL
SBFL 25/10	25	M 10	20	11	6.5	25	43	89	39	50
SBFL 35/10	35	M 10	20	11	8	25	43	89	39	50
SBFL 50/12	50	M 12	20	13	9	25	43	89	39	50
SBFL 70/12	70	M 12	20	13	11	25	43	89	39	50
SBFL 95/12	95	M 12	20	13	12.5	25	43	89	39	50
SBFL 120/12	120	M 12	25	13	13.5	30	59	116	49	67
SBFL 150/12	150	M 12	25	13	15.5	30	59	116	49	67
SBFL 185/12	185	M 12	32	13	17	35	59	125	58	67
SBFL 240/ 14	240	M 14	32	15	19.5	35	59	125	58	67
SBFL 300/16	300	M 16	34	17	23.5	42	85	155	65	90
SBFL 400/16	400	M 16	40	17	26.5	42	85	155	65	90

- All Dimensions in mm.
- For any other dimensions, please contact us.
- Due to continuous product improvements, some specifications could be changed without notice.

SBFL/R2-0911

www.elsewedyelectric.com

ELSEWEDY SEDCO
ITALSMEA - ELSEWEDY

Office: Plot 27, 1st District, 5th Settlement, P.O. Box 311, New Cairo, 11835, Egypt
Tel.: (+202) 27 599 750 - 751 Fax: (+202) 27 599 752

Factory: PC.#36A South (A'1), Industrial Region, 10th of Ramadan City
Tel.: +2 015 411141 - Fax: +2 015 411142
E-mail: elastimold@elsewedy.com
: sedco@elsewedy.com

ELSEWEDY SEDCO

Subsidiary of ELSEWEDY ELECTRIC

Tubular Copper Connectors

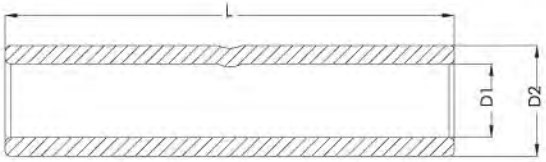

Tube : Seamless, one piece tube
Material : Electrolytic tough pitch copper
Conductivity : High conductive 99.9% E.T.P
Finish : Tin plated to assure maximum conductivity
Identification : Conductor size and connector die size are marked on every piece
Manufacturing Standard : DIN 46267 part 1
Tube Manufacturing : In compliance with DIN EN 13600.
Positive cable stops ensure proper insertion of conductors to full depth.

Code	Conductor Size mm²	Connector Die D3(*)	D1	D2	L(**)
STCC 6/30	6	5	3.8	5.5	30
STCC 10/30	10	6	4.5	6	30
STCC 16/50	16	8	5.5	8.5	50
STCC 25/50	25	10	7	10	50
STCC 35/50	35	12	8.2	12.5	50
STCC 50/56	50	14	10	14.5	56
STCC 70/56	70	16	11.5	16.5	56
STCC 95/70	95	18	13.5	19	70
STCC 120/70	120	20	15.5	21	70
STCC 150/80	150	22	17	23.5	80
STCC 185/85	185	25	19	25.5	85
STCC 240/90	240	28	21.5	29	90
STCC 300/100	300	32	24.5	32	100
STCC 400/150	400	38	27.5	38.5	150
STCC 500/160	500	42	31	42	160
STCC 630/160	630	44	34.5	44	160
STCC 800/200	800	52	40	52	200

(*) D3= Recommended die size for hexagonal crimping ⬡
(**) L= 100 mm for (F,G....M elastimold PCJ joint)
L= 120 mm for (N,..Q elastimold PCJ joint)

- All dimensions in mm.
- Other dimensions, shapes or sizes are available upon request.
- Due to continuous product improvement, some specifications could be changed without notice.

STCC/R2-0911

www.elsewedyelectric.com

ELSEWEDY SEDCO
ITALSMEA - ELSEWEDY

Office: Plot 27, 1st District, 5th Settlement, P.O. Box 311, New Cairo, 11835, Egypt
Tel.: (+202) 27 599 750 - 751 Fax: (+202) 27 599 752

Factory: PC.#36A South (A'1), Industrial Region, 10th of Ramadan City
Tel.: +2 015 411141 - Fax: +2 015 411142
E-mail: elastimold@elsewedy.com
: sedco@elsewedy.com

ELSEWEDY SEDCO

Subsidiary of ELSEWEDY ELECTRIC

Tubular Aluminum Connectors

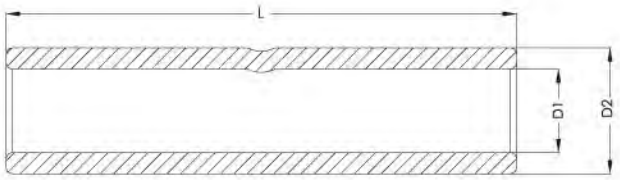

Tube : Seamless, one piece tube
Material : Pure aluminum
Conductivity : High conductive 99.5%
Finish : Chemically treatment
Identification : Conductor size and connector die size are marked on every piece
Tube manufacturing : According to DIN EN 755-7.
Positive cable stops ensure proper insertion of conductors to full depth.

Code	Conductor Size mm²	Connector Die D3(*)	D1	D2	L(**)
STAC 25/70	25	12	6.8	12	70
STAC 35/85	35	14	8.0	14	85
STAC 50/85	50	16	10.0	16	85
STAC 70/105	70	18	11.2	18	105
STAC 95/105	95	22	13.2	22	105
STAC 120/105	120	22	14.7	22	105
STAC 150/125	150	25	16.3	25	125
STAC 185/125	185	28	18.5	28	125
STAC 240/145	240	32	21.0	32	145
STAC 300/145	300	34	23.3	34	145
STAC 400/210	400	38	26.0	38	210
STAC 500/210	500	44	29.0	44	210

(*) D3= Recommended die size for hexagonal crimping ⬡
(**) L= 100 mm for (F,G....M elastimold PCJ joint)
L= 120 mm for (N,..Q elastimold PCJ joint)

- All dimensions in mm.
- Other dimensions, shapes or sizes are available upon request.
- Due to continuous product improvement, some specifications could be changed without notice.

STAC/R2-0911

www.elsewedyelectric.com

ELSEWEDY SEDCO
ITALSMEA - ELSEWEDY

Office: Plot 27, 1st District, 5th Settlement, P.O. Box 311, New Cairo, 11835, Egypt
Tel.: (+202) 27 599 750 - 751 Fax: (+202) 27 599 752

Factory: PC.#36A South (A'1), Industrial Region, 10th of Ramadan City
Tel.: +2 015 411141 - Fax: +2 015 411142
E-mail: elastimold@elsewedy.com
: sedco@elsewedy.com

ELSEWEDY SEDCO

Subsidiary of ELSEWEDY ELECTRIC

Standard Copper Connectors

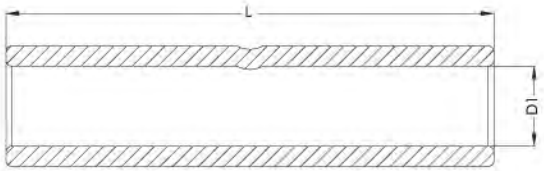

Tube : Seamless, one piece tube
Material : Electrolytic tough pitch copper
Conductivity : High conductive 99.9% E.T.P
Finish : Tin plated to assure maximum conductivity
Identification : Conductor size is marked on every piece
Tube Manufacturing : In compliance with DIN EN 13600.
Positive cable stops ensure proper insertion of conductors to full depth.

Code	Conductor Size mm²	D1	L
SSCC 6/25	6	3.8	25
SSCC 10/30	10	4.5	30
SSCC 16/35	16	5.5	35
SSCC 25/40	25	6.8	40
SSCC 35/45	35	8.2	45
SSCC 50/50	50	9.5	50
SSCC 70/55	70	11.2	55
SSCC 95/60	95	13.4	60
SSCC 120/65	120	15.0	65
SSCC 150/70	150	16.5	70
SSCC 185/80	185	19.0	80
SSCC 240/90	240	21.0	90
SSCC 300/100	300	23.5	100
SSCC 400/110	400	27.0	110
SSCC 500/140	500	31.0	140
SSCC 630/160	630	34.0	160

- All dimensions in mm.
- Other dimensions, shapes or sizes are available upon request.
- Due to continuous product improvement, some specifications could be changed without notice.

SSCC/R2-0911

www.elsewedyelectric.com

ELSEWEDY SEDCO
ITALSMEA - ELSEWEDY

Office: Plot 27, 1st District, 5th Settlement, P.O. Box 311, New Cairo, 11835, Egypt
Tel.: (+202) 27 599 750 - 751 Fax: (+202) 27 599 752

Factory: PC.#36A South (A'1), Industrial Region, 10th of Ramadan City
Tel.: +2 015 411141 - Fax: +2 015 411142
E-mail: elastimold@elsewedy.com
: sedco@elsewedy.com

ELSEWEDY SEDCO

Subsidiary of ELSEWEDY ELECTRIC

Heat Shrinkable Cable Breakouts

Description

Cable breakouts are designed for cable sealing crutches and to provide resistance to abrasion, weathering and chemical attack. It's applicable for indoor and outdoor applications for all types of polymeric and paper insulated cables.

Main Features

- Resistance against abrasion, corrosion, chemicals, solvents, common fluids.
- Resistance against weather, UV and oxidation.
- Compatible with nearly all cable types.
- Unlimited shelf life.
- Easy and fast installation.
- Available with adhesive or mastic if required.

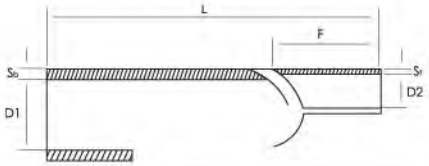

Material Specification

Application temperature	°C	-40 : +105	
Shrinking temperature	°C	> 120	
Tensile strength	N / mm^2	Min 12	ASTM 412
Elongation at break	%	Min 300	ASTM 412
Thermal aging	(168h / 150 °C)	-	-
Tensile strength after aging	N/mm^2	Min 10	ASTM 412
Elongation at break	%	Min 250	ASTM 412
Water absorption	%	< 0.5	DIN 53495
Chemical resistance		Good	ISO 175
Volume ResistivityOhm . cm		Min 10^{12}	ASTM 257
Carbon Black Content	%	> 3	ASTM 4D1603

Dimensions

Type	Cable Side			(L) mm total length after free recovery	Finger Side			
	Diameter		(Sb) mm standard thickness after free recovery		Diameter		(Sf) mm standard thickness after free recovery	(F) mm finger length after free recovery
	(D1) mm as supplied	(d1) mm after free recovery			(D2) mm as supplied	(d2) mm after free recovery		
STFB0	50	20	3.5	170	22	8	2.2	50
STFB1	75	30	3.5	215	32	13	2.2	75
STFB2	110	45	5	290	52	21	4	110
STFB3	135	55	5	310	64	27	4	135

- All dimensions in mm.
- For any other dimensions, please contact us.
- Due to continuous product improvements, some specifications could be changed without notice.

STFB/R2-0911

www.elsewedyelectric.com

ELSEWEDY SEDCO
ITALSMEA - ELSEWEDY

Office: Plot 27, 1st District, 5th Settlement, P.O. Box 311, New Cairo, 11835, Egypt
Tel.: (+202) 27 599 750 - 751 Fax: (+202) 27 599 752

Factory: PC.#36A South (A'1), Industrial Region, 10th of Ramadan City
Tel.: +2 015 411141 - Fax: +2 015 411142
E-mail: elastimold@elsewedy.com
: sedco@elsewedy.com

ELSEWEDY SEDCO

Subsidiary of ELSEWEDY ELECTRIC

Heat Shrinkable End Caps

Description

Heat shrinkable stabilized cross linked polyolefin sealing caps (SC), in black color are ideal for protecting cable ends. SC are designed to seal the end of cables against ingress of moisture and contamination, and provide insulation and resistance to abrasion, weathering and chemical attack. Such sealing caps are required for cable transport, storage and installation.

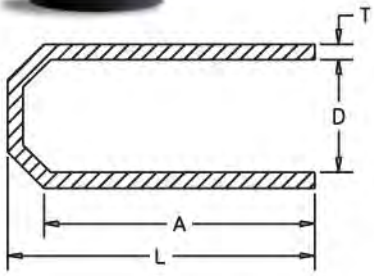

Main Features

- Resistance against abrasion, corrosion,chemicals, solvents and common fluids.
- Resistance against weather, UV and oxidation.
- Compatible with nearly all types of cables.
- Rated up to 600/1000 V energized cable.
- Unlimited shelf life.
- Easy and fast installation.
- Available with adhesive, mastic, or valve if required.

Material Specification

Application Temperature	°C	-40 : +150	-
Shrinking Temperature	°C	> 120	-
Tensile Strength	N/mm^2	Min 12	ASTM 412
Elongation at Break	%	Min 300	ASTM 412
Thermal Aging	(168h / 150°C)	-	-
Tensile Strength after aging	N/mm^2	Min 10	ASTM 412
Water Absorption	%	< 0.5	DIN 53495
Chemical Resistance		Good	ISO 175
Volume Resistivity		Min 10^{12}	ASTM 257
Carbon Black content	%	> 3	ASTM D1603

Dimensions

Type	As Supplied			After Free Recovery	
	(L)	(A)	(D)	(T)	(D) Max.
SC 14	50	45	14	3	4
SC 20	65	60	20	3	9
SC 35	90	80	35	3	15
SC 55	110	88	55	3.7	24
SC 80	120	105	80	4	35
SC 100	140	110	100	4.8	55
SC 115	150	110	115	4.8	55

- All Dimensions in mm.
- Other dimensions, shapes or sizes are available upon request.
- Due to continuous product improvements, some specifications could be changed without notice.

SC/R2-0911

www.elsewedyelectric.com

ELSEWEDY SEDCO
ITALSMEA - ELSEWEDY

Office: Plot 27, 1st District, 5th Settlement, P.O. Box 311, New Cairo, 11835, Egypt
Tel.: (+202) 27 599 750 - 751 Fax: (+202) 27 599 752

Factory: PC.#36A South (A'1), Industrial Region, 10th of Ramadan City
Tel.: +2 015 411141 - Fax: +2 015 411142
E-mail: elastimold@elsewedy.com
: sedco@elsewedy.com

ELSEWEDY SEDCO

Subsidiary of ELSEWEDY ELECTRIC

Heat Shrinkable Boots

Description

Heat shrinkable stabilized cross-linked polyolefin boots, in red or grey color, designed to provide protection to the end cables and bushing insulation and sealing against ingress of moisture and contamination. and provide insulation and resistance to abrasion, weathering and chemical attack.

Main Features

- Resistance against abrasion,corrosion, chemicals, solvents and common fluids.
- Resistance against weather, UV and oxidation.
- High tracking resistant.
- Compatible with nearly all types of cables.
- Unlimited shelf life.
- Easy and fast installation.
- Available with adhesive or mastic if required.

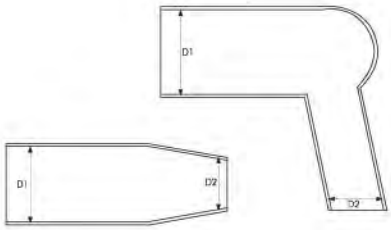

Material Specification

Physical Properties		
Specific gravity	1.19 min.	ASTM D-1505
Tensile strength	7 N/mm^2 (min.)	ASTM D-412/ISO 37
Ultimate alongation	300% (min.)	ASTM D-412/ISO 37
Hardness	32+3 shore D	ASTM D-2240
Water absorption	1% (max.)	ASTM D-570/ISO 62
Thermal Ageing (168 h/150°C)		
Tensile strength	6 N/mm^2 (min.)	ASTM D-412/ISO 37
Electrical Properties	250% (min.)	ASTM D-412/ISO 37
Volume resistivity	10^{12} ohm-cm (min.)	ASTM D-257/IEC 93
Electrical strength	10 kv/mm (min.)	ASTM D-149/IEC 243
Dielectric constant	5 (max.)	ASTM D-150/IEC 250
Resistance to track	No failure by tracking	ASTM D-2303

Type	Bushing Side		Cable Side	
	D1	d1	D2	d2
Straight Boot SB1	81	30	48	15
Straight Boot SB2	95	35	70	25
Right Angle Boot RAB1	81	35	48	15
Right Angle Boot RAB2	95	35	70	25

- All Dimensions in mm.
- For any other dimensions, please contact us.
- D1 and D2 are the dimensions as supplied
- d1 and d2 are the dimensions after free recovery
- Due to continuous product improvements, some specifications could be changed without notice.

SB-RAB/R2-0911

ELSEWEDY SEDCO
ITALSMEA - ELSEWEDY

Office: Plot 27, 1st District, 5th Settlement, P.O. Box 311, New Cairo, 11835, Egypt
Tel.: (+202) 27 599 750 - 751 Fax: (+202) 27 599 752

Factory: PC.#36A South (A'1), Industrial Region, 10th of Ramadan City
Tel.: +2 015 411141 - Fax: +2 015 411142
E-mail: elastimold@elsewedy.com
: sedco@elsewedy.com

ELSEWEDY SEDCO

Subsidiary of ELSEWEDY ELECTRIC

Heat Shrinkable Joint for low voltage up to 0.6/1 KV

Manufacturing and developing power cable accessories up to 1.2 kV for low voltage is one of the core business of ElSewedy Electric Group .

Since more than 20 years is one of the world market leaders in power cable accessories.

DESCRIPTION:

• SHSJ (cable - Joint) is outstandingly suitable for Terminating single, multi-core, polymeric (XLPE, PVC ...) and PILC insulated power cables,

Al or Cu, armored or non-armored in the low voltage range up to 0.6/1k.V (1.2kV).

•The product range covers cable joints, cable connector from cable conductor size 6mm2 up to 630mm2.

•These types of cable accessories are used for 3- and 1-core cables as well as paper insulated cables.

•Supplied in easy-to-use kits, including all required items for installation

ELSEWEDY SEDCO
ITALSMEA - ELSEWEDY

Office: Plot 27, 1st District, 5th Settlement, P.O. Box 311, New Cairo, 11835, Egypt
Tel.: (+202) 27 599 750 - 751 Fax: (+202) 27 599 752

Factory: PC.#36A South (A'1), Industrial Region, 10th of Ramadan City
Tel.: +2 015 411141 - Fax: +2 015 411142
E-mail: elastimold@elsewedy.com
: sedco@elsewedy.com

ELSEWEDY SEDCO

Subsidiary of ELSEWEDY ELECTRIC

Heat Shrinkable Joint for low voltage up to 0.6/1 KV

FEATURES:

-Quick, easy and simple installation.

-Exceptionally good electrical insulation.

-Good mechanical load-bearing ability.

-No maintenance time necessary.
Usable immediately.

-Unlimited shelf life.
Very easy customization.

-Minimum shrink temperature: 110C

ELSEWEDY SEDCO
ITALSMEA - ELSEWEDY

Office: Plot 27, 1st District, 5th Settlement, P.O. Box 311, New Cairo, 11835, Egypt
Tel.: (+202) 27 599 750 - 751 Fax: (+202) 27 599 752

Factory: PC.#36A South (A'1), Industrial Region, 10th of Ramadan City
Tel.: +2 015 411141 - Fax: +2 015 411142
E-mail: elastimold@elsewedy.com
: sedco@elsewedy.com

Heat Shrinkable Joint for low voltage up to 0.6/1 KV

Ordering Formula:

SHSJ	X C	-	X X X	-	X	-	X	-	X
	No. of Cores		Conductor Size		Armor Continuity		Outer Jacket		Connector

N	Not Required
C	Copper Braid
A	Alu. Cage
S	Steel Cage
O	Other

N	Non Adh. Tube
A	Adhesive Tube

N	Not Required
A	Aluminum
C	Copper

* Standard Colour(s) For the tube: Black.

*Standard type of tube: unadhesive.

ELSEWEDY SEDCO
ITALSMEA - ELSEWEDY

Office: Plot 27, 1st District, 5th Settlement, P.O. Box 311, New Cairo, 11835, Egypt
Tel.: (+202) 27 599 750 - 751 Fax: (+202) 27 599 752

Factory: PC.#36A South (A'1), Industrial Region, 10th of Ramadan City
Tel.: +2 015 411141 - Fax: +2 015 411142
E-mail: elastimold@elsewedy.com
: sedco@elsewedy.com

ELSEWEDY SEDCO

Subsidiary of ELSEWEDY ELECTRIC

Heat Shrinkable Termination for low voltage up to 0.6/1 KV

SHST(cable-Termination) is outstandingly suitable for Terminating single, multi-core, polymeric (XLPE, PVC ...) and PILC insulated power cables, Al or Cu, armored or non-armored in the low voltage range up to 0.6/1k.V (1.2kV).

The product range covers cable terminations, cable lugs as well as indoor- and outdoor terminations

FEATURES:

SHST (cable-Termination) has a Properties Of Excellent Insulating, Environmental Sealing, And Resistance To Impact and Abrasion, Designed For Applications to Seal And Protect Electrical.

Also,

· Quick, easy and simple installation.

· Exceptionally good electrical insulation.

· Good mechanical load-bearing ability.

· No maintenance time necessary.

· Usable immediately.

. Unlimited shelf life.

.Very easy customization.

.Minimum shrink temperature: 110C

ELSEWEDY SEDCO
ITALSMEA - ELSEWEDY

Office: Plot 27, 1st District, 5th Settlement, P.O. Box 311, New Cairo, 11835, Egypt
Tel.: (+202) 27 599 750 - 751 Fax: (+202) 27 599 752

Factory: PC.#36A South (A'1), Industrial Region, 10th of Ramadan City
Tel.: +2 015 411141 - Fax: +2 015 411142
E-mail: elastimold@elsewedy.com
: sedco@elsewedy.com

Heat Shrinkable Termination for low voltage up to 0.6/1 KV

ORDERING FORMULA:

SHST X C - X X X - X - X - X

No. of cores	Conductor size	Tubes type	tube Length In cm	Lug type

N	Not Adhesive
R	Adhesive

N	Not Required
A	Aluminum
C	Copper
S	Special

* Standard Colour(s) for the tube: Black.

*Standard type of tube: un adhesive.

*For special requirements, please specify in your order.

ELSEWEDY SEDCO
ITALSMEA - ELSEWEDY

Office: Plot 27, 1st District, 5th Settlement, P.O. Box 311, New Cairo, 11835, Egypt
Tel.: (+202) 27 599 750 - 751 Fax: (+202) 27 599 752

Factory: PC.#36A South (A'1), Industrial Region, 10th of Ramadan City
Tel.: +2 015 411141 - Fax: +2 015 411142
E-mail: elastimold@elsewedy.com
: sedco@elsewedy.com